PROJECT 09: Design and Analysis of Low Voltage Cascode Current Mirror by using Cadence Virtuoso

A Comprehensive Study of Analog Circuits

By: Priya Chaudhary, Astitva Johri and

Bhavya Solanki

Chapters:

List of Figures……..……. 3

1. Introduction …….. 4
2. Brief Description…… 5
3. Circuit Design……. 6-7
   3.1 Schematic Design ……..……..……... 6
   3.2 Simulation Steps……..…… 6
   3.3 Analysis and Results …..…… 7
4. Simulation Results…….. 8
5. Advantages and Disadvantages…….. 9
   5.1 Advantages……. 9
   5.2 Disadvantages……. 9
6. Conclusion…….. 10
7. Frequently Asked Questions (FAQs)…….. 11

LIST OF FIGURES

Figure 3.1 Circuit of Low Voltage Cascode Current Mirror..…… 7

Figure 4.1 Simulation Results of Low Voltage Cascode Current Mirror.……...…… 8

1. INTRODUCTION

Current mirrors are fundamental building blocks in analog circuit design, widely used to replicate a reference current to multiple branches in circuits such as biasing, active loads, and signal processing. As demand for low-voltage, low-power designs increases, ensuring accurate and stable current replication becomes increasingly challenging.

The cascode current mirror offers significant advantages over simple current mirrors, primarily through its ability to increase output resistance and improve current matching. In low-voltage applications, the challenge becomes even more pronounced, as transistor performance is highly dependent on the available supply voltage. Therefore, a low voltage cascode current mirror is especially beneficial for providing stable, high-accuracy current replication under constrained voltage conditions.

This documentation explores the design and analysis of low voltage cascode current mirrors using Cadence Virtuoso, a powerful tool for simulating and optimizing integrated circuit designs. By leveraging the advantages of the cascode architecture, combined with careful attention to design for lowvoltage operation, the goal is to achieve reliable performance in modern analog circuits operating under lower supply voltages.

2. BRIEF DESCRIPTION

A low voltage cascode current mirror is an advanced circuit design that improves upon the basic current mirror by incorporating a cascode transistor. The addition of the cascode stage enhances the output resistance, reduces the impact of voltage variations, and improves current matching. This design is particularly useful in low-voltage applications where accurate current replication is needed despite the limited voltage headroom. By maintaining a stable current in low voltage systems, it ensures that the output current remains consistent and less sensitive to changes in load or supply voltage.

Key Features:

1. **Improved Output Resistance:** The cascode structure increases the output resistance, leading to better current replication accuracy.
2. **Reduced Sensitivity to Voltage Variations:** The cascode transistors help isolate the output transistor from variations in the load or supply voltage, maintaining more consistent current.
3. **Enhanced Current Matching:** With the cascode configuration, current matching between the reference and output branches is significantly improved, especially in low-voltage environments.
4. **Low Voltage Operation:** The design is optimized for low supply voltages, maintaining proper transistor operation in the saturation region with minimal voltage headroom.
5. **Better Stability:** The cascode structure minimizes the variation in current due to voltage fluctuations, improving the stability of the current mirror.
6. **Optimized for Low-Power Circuits:** The design is particularly effective in low-power and energy-efficient applications by ensuring accurate current replication with minimal power consumption.

3. CIRCUIT DESIGN

3.1 Schematic Design

A low-voltage cascode current mirror consists of:

- **M1:** Reference transistor setting the reference current.
- **M2 and M3:** Cascode transistors to increase output impedance.
- **M4:** Output transistor to mirror the current.

The transistors are arranged such that the output current mirrors the reference current, with proper biasing to ensure the transistors remain in saturation.

3.2 Simulation Steps

- **Build Circuit:** Set up the schematic with the MOSFETs and current reference.
- **DC Analysis:** Verify the operating point and saturation mode of transistors.
- **Current Mirror Test:** Perform a transient or DC sweep to check mirrored current.
- **Output Impedance:** Run AC small-signal analysis to evaluate output impedance.
- **Low-Voltage Testing:** Simulate at low voltages and ensure proper operation.

3.3 Analysis and Results

- **Current Accuracy**: The mirrored current should match the reference current (with slight mismatches due to threshold voltage differences).
- **Output Impedance**: Cascode configuration increases output impedance for better current mirroring.
- **Low-Voltage Performance**: Ensure transistors stay in saturation despite low voltage.

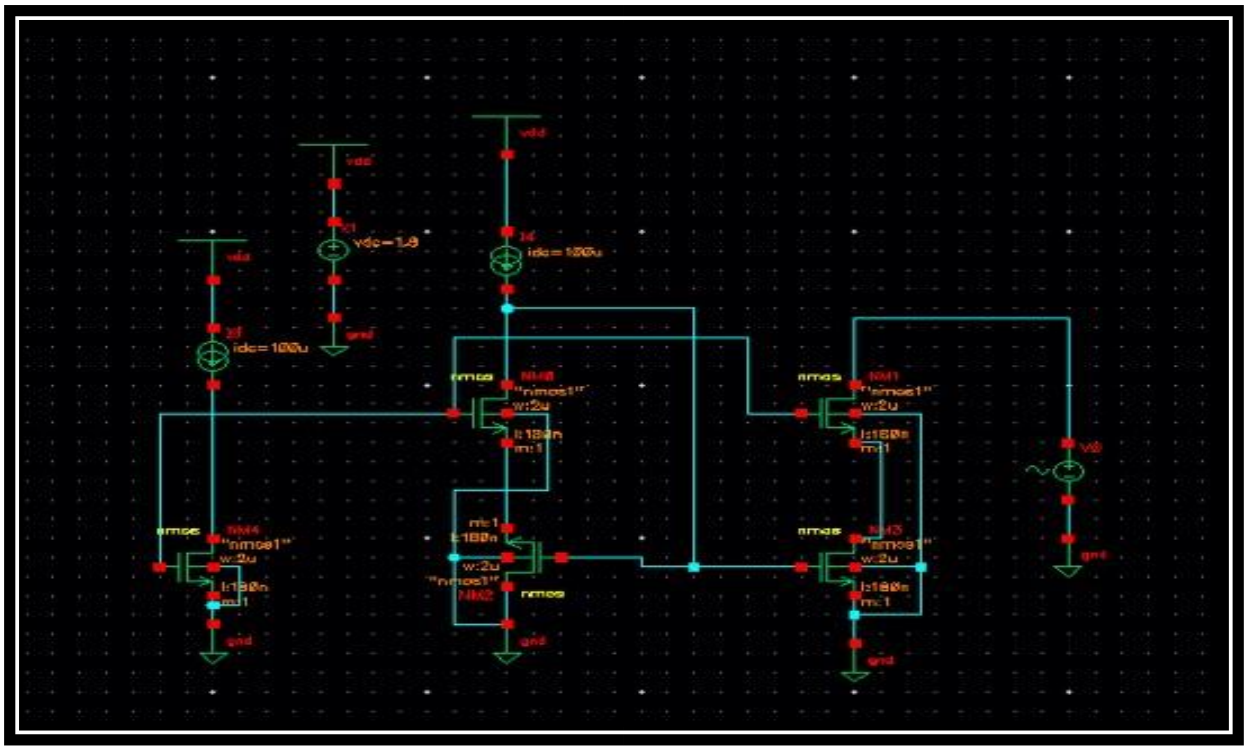

Figure 3.1 Circuit of Low Voltage Cascode Current Mirror

4. SIMULATION RESULTS

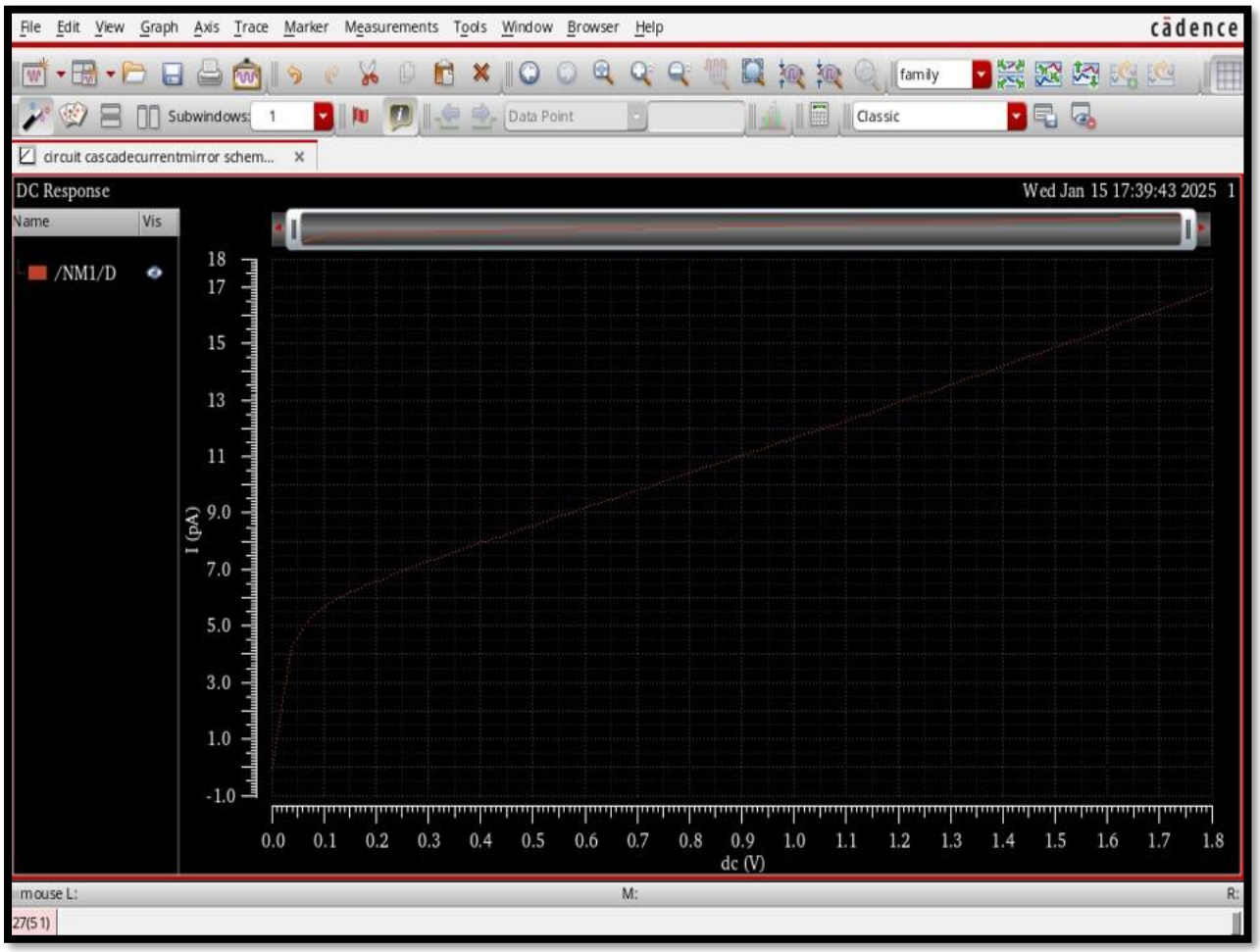

Figure 4.1: Simulation Results of Low Voltage Cascode Current Mirror

5. ADVANTAGES AND DISADVANTAGES

5.1 Advantages:-

1. **Improved Output Resistance:** The cascode structure increases the output resistance, improving the current mirror's accuracy**.**
2. **Higher Current Matching:** By reducing the influence of output voltage variations, the cascode structure enhances current matching between the reference and output branches.
3. **Reduced Sensitivity to Voltage Variations:** The addition of cascode transistors significantly reduces the sensitivity of the output current to voltage changes, leading to better performance.
4. **Better Power Efficiency:** In low voltage designs, the cascode current mirror operates with minimal headroom, making it suitable for low-power applications.

5.2 Disadvantages:-

1. **Complexity:** The addition of cascode transistors increases the complexity of the design and layout.
2. **Increased Area:** The cascode structure requires more area on the chip due to additional transistors.
3. **Higher Power Consumption:** The extra transistors in the cascode structure can result in a slight increase in power consumption.
4. **Reduced Voltage Swing:** In some cases, the reduced voltage headroom in low voltage designs may limit the achievable output voltage swing.

6. CONCLUSION

The low voltage cascode current mirror is a powerful solution for ensuring accurate current replication in low-voltage systems, offering significant improvements over simpler current mirror designs. Its ability to improve output resistance and current matching makes it a valuable component in high-precision analog circuits, especially those operating with reduced supply voltages. While the design introduces additional complexity in terms of transistor sizing and biasing, the trade-off is justified by the enhanced stability and reduced sensitivity to voltage fluctuations, which are crucial in modern low-power applications.

By using Cadence Virtuoso, engineers can precisely model and optimize the low voltage cascode current mirror to ensure optimal performance. Through careful design of transistor dimensions, biasing strategies, and simulation techniques, the cascode current mirror can be made to operate efficiently and accurately within the tight voltage constraints typical of modern integrated circuits. Despite the challenges associated with low voltage operation, the cascode current mirror remains a highly effective solution for achieving superior current matching, accuracy, and stability, making it an indispensable tool in the design of reliable, low-power analog circuits.

7. FREQUENTLY ASKED QUESTIONS (FAQs)

Q1 What is the main benefit of using a cascode current mirror?

Ansswer: The primary benefit of a cascode current mirror is its ability to improve the output resistance and reduce the dependence of the output current on voltage variations, thus providing better current matching.

Q2 How does the low voltage design affect the cascode current mirror?

Answer: In low voltage designs, careful consideration must be given to the voltage headroom for each transistor. Low-Vth devices and minimal stacking of transistors can help ensure proper operation in these designs.

Q3 What is the role of Cadence Virtuoso in this design?

Answer: Cadence Virtuoso provides an environment for designing, simulating, and optimizing the current mirror. It allows for the precise sizing of transistors, analysis of the operating point, and simulation of various corner cases to ensure the current mirror performs correctly under different conditions.

Q4 Can the cascode current mirror be used in high-speed applications?

Answer: While the cascode current mirror offers improved current matching and stability, its performance in high-speed applications may be limited by the added capacitance from the extra transistors. For high-speed applications, other current mirror architectures may be more suitable.

Q5 What challenges should be considered when designing a low voltage cascode current mirror?

Answer: Challenges include ensuring that the transistors remain in saturation despite the low supply voltage, managing threshold voltage effects, and minimizing power consumption while maintaining accurate current replication.